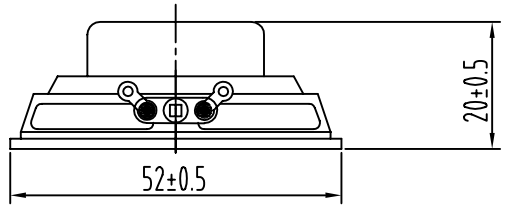

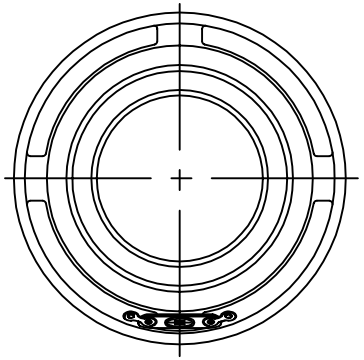

ITEM		SPECIFICATION	REMARKS
1	Dimensions	Ø52.0 x 20 mm	
2	Impedance	8.0Ω±15%	@ 2.0kHz/1V
3	Input Power	3W/4W	RMS/Peak
4	Lowest Resonant Frequency, F_0	160Hz ±20%	Constant Voltage (1V RMS)
5	Sensitivity	81dB ±3dB	Measured 1W/1m @ (0.3/0.4/0.5/0.6 kHz) Avg. Using IEC 268-5 Baffle.
6	Total Harmonic Distortion	Max. 6% Max. 2.5%	@ 1W/1m 160- 200 Hz @ 1W/1m 200-15,000 Hz
7	Effective Frequency Range	F_0 to 15kHz	1W/1m
8	Magnet Dimension	Ø15.5 x 5.0	OD x H
	TESTS		
9	Operation Test	White noise of 3W is applied for 96h.	The speaker must meet items 4 to 7 after test
10	Extraneous Noise	4.89 VRMS from F0 to 15 kHz	No Buzzes or Rattles shall occur
11	Max. Input Power	The speaker shall be exposed to EIA white noise of 4 W for 1min.	The speaker must meet items 4 to 7 after test
12	Polarity	A positive DC current is applied to the terminal marked +	There shall be no buzz/rattle and the part shall exhibit no physical damage (rivets, weld and glue must hold, no scratches or burrs on surfaces and no peeling of paint/coating)
13	Vibration (no box)	10 sweeps of 3 minute duration from 10Hz-30Hz-10Hz (Double Amplitude – 0.75mm)	
		10 sweeps of 3 minute duration from 30Hz-55Hz-30Hz (Double Amplitude – 0.55mm)	
14	Drop Test (in box)	Speakers properly packaged in their shipping carton are dropped on each side of the carton except the top from a height of 80cm (carton GW≤10kg) or 60cm (10kg<carton GW≤25kg)	
15	Low Temperature Exposure	The speaker shall be exposed to -20 ±2°C, 50%RH for 96h with a 1h rest at room temperature.	
16	High Temperature Exposure	The speaker shall be exposed to 70 ±3°C, 50%RH for 96h with a 1h rest at room temperature.	
17	Humidity Exposure	The speaker shall be exposed to 40±3°C, 90%RH for 96h with a 1h rest at room temperature.	

Typical Frequency Response

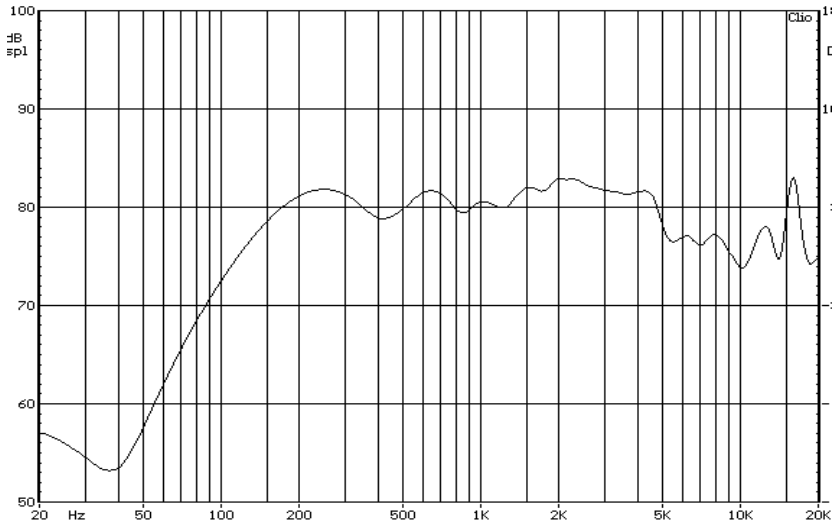

Stetron International Inc.	Speaker Specification ϕ52 mm, Powder coated frame,8 Ω, paper cone, Nd-Fe-B magnet, 3W, RoHS		
SIZE A	DRAWN BY	PART No. D0052008NR155AR	
SCALE N/A	DATE 19-Nov-10	SHEET 1 of 1	
REV 0.0	DWG No. / FILE DB10-072		