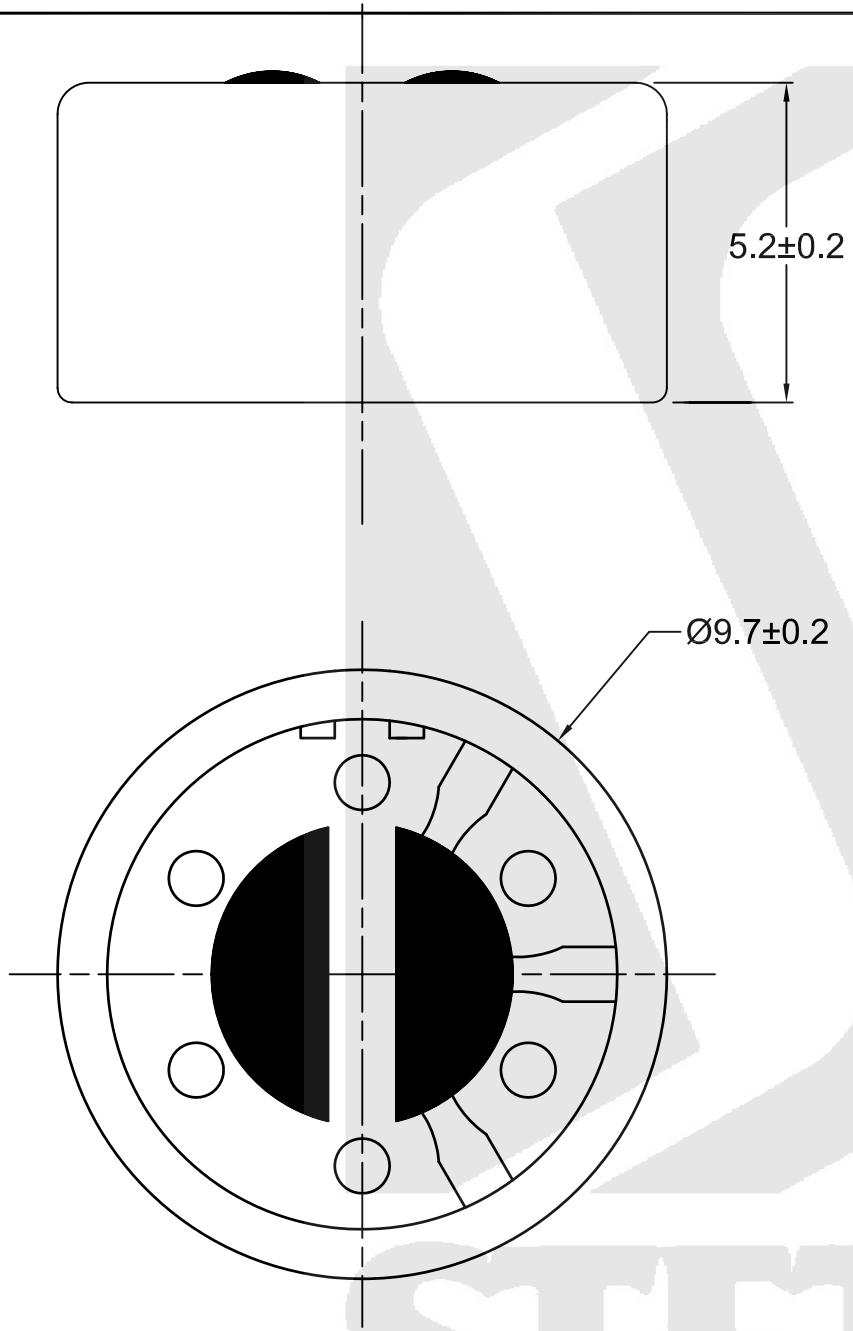

Parameter	Specification
Size	9.7 x 5.2mm
Impedance	680Ω
S/N ratio (A Weighted)	Min 60 dB
Sensitivity	-47 dB
Operating voltage	1.5 Vdc
Max Input SPL	115dB (THD ≤ 5%)

Typical Frequency Response

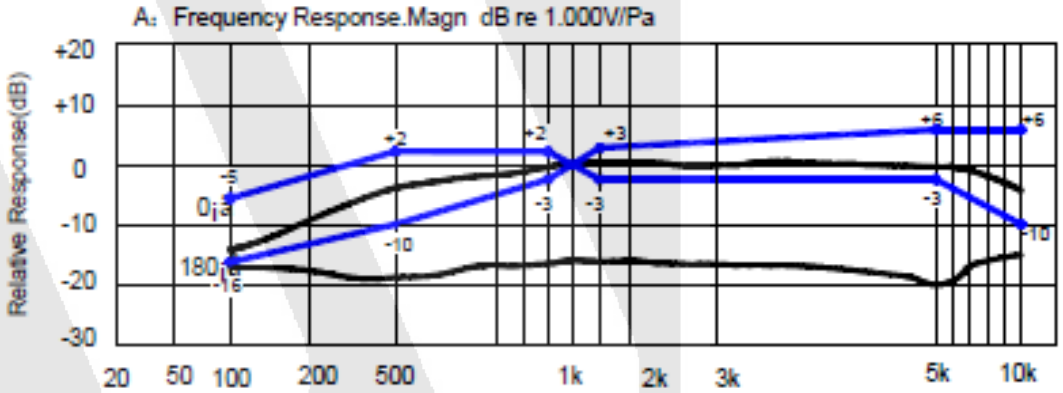

*Specifications subject to change

Part No. EU100506860W0MGR | **Microphone size: 9.7mm** | **Web Site: www.stetron.com**